HSF Pb RoHS

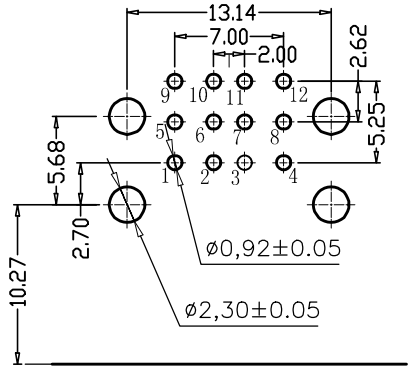

P.C.B LAYOUT

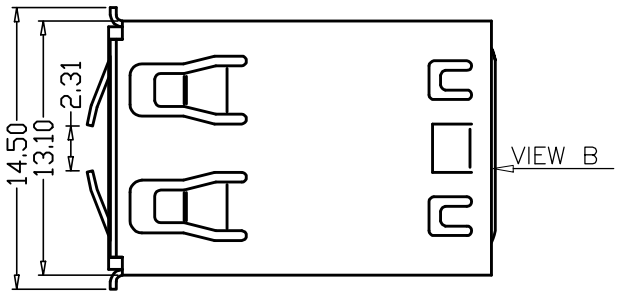

Specifications:
Current Rating: 1.5A Max
Contact Resistance: 30 milliohms MAX
Dielectric Withstanding Voltage:
500V AC AT Sea Levol
Insulation Resistance: 1000 Megohms MIN
Housing:
Temperature Thermoplastics,LCP UL 94V-0
Contact:
Copper Alloy T=0.25mm Piated Gold in Mating Area;
Tin On Solder Talls
Shell:Iron T=0.30mm Nickel/Plating

Ordering Code:

UAFR06 - X - B - X - X - X - X
① ② ③ ④ ⑤ ⑥ ⑦

① Series No:

② Shell Material:
B:Brass I:Iron
S:stainless steel

③ Insulator Material:
P:PBT+30%GF
△ B:PA6T
L:LCP

④ Contact Material:
B:Brass
P:phosphor copper

⑤ Contact Plating
G0: Gold flash
G1: 3u″ Gold
G2: 5u″ Gold
G3: 10u″ Gold
G4: 15u″ Gold
G5: 30u″ Gold

⑥ Color Insulator
A:White B:Black

⑦ Packing
A:Tray B:Bag
C:Tube D:Tape & Reel

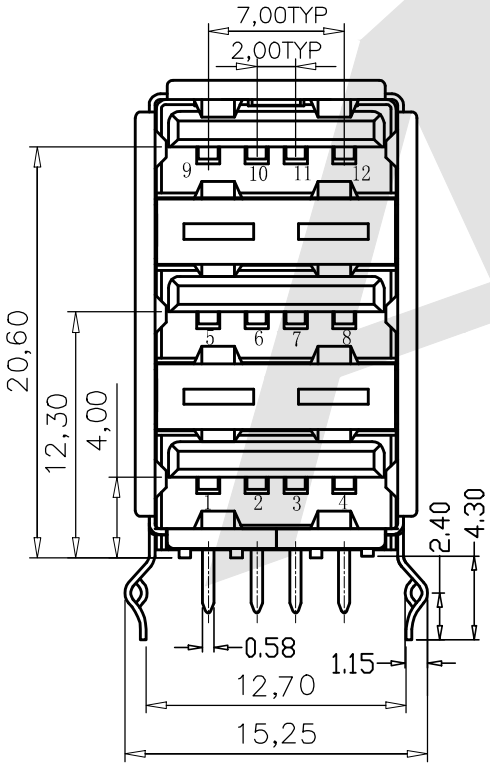

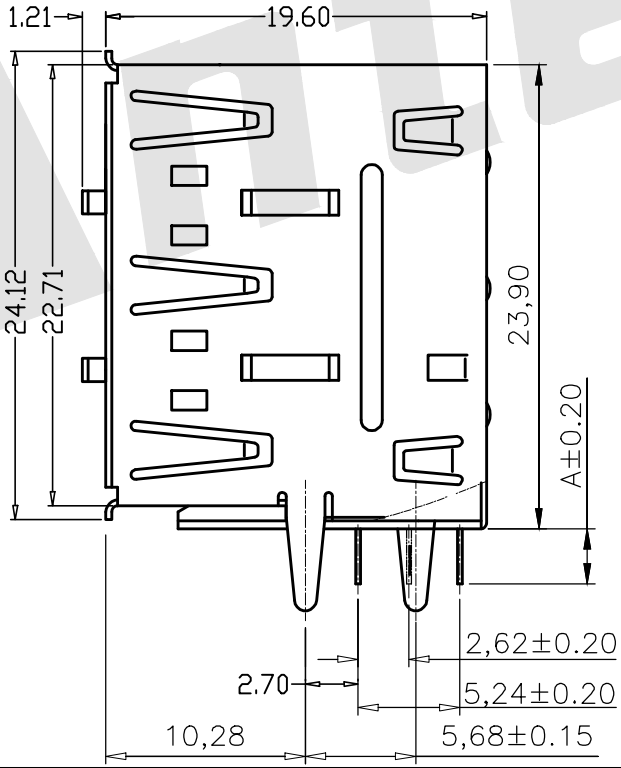

REV	DESCRIPTION	DATE
	△ Add PA6T Option	18/02/2022

Unless Otherwise specified tolerance
X. ±0.35 X.XX: ±0.20
X.X: ±0.25 X.XXX: ±0.15

SCALE: As Shown	UNIT: mm
DRAW Lv Xun Hua	DATE 17/06/2019
CHECK BobYang	DATE 17/06/2019

3rd ANGLE PROJECTION

ANTENK ELECTRONICS CO,.LTD
Http://www.antenk.com
E-mail:sales@antenk.com

TITLE: USB A Type Receptacle Triple Stack Angle DIP13.14mm

DRAWING NO: UAFR06-XBXXXX

PRODUCT NO: UAFR06-XBXXXX

Antenk