HSF Pb RoHS

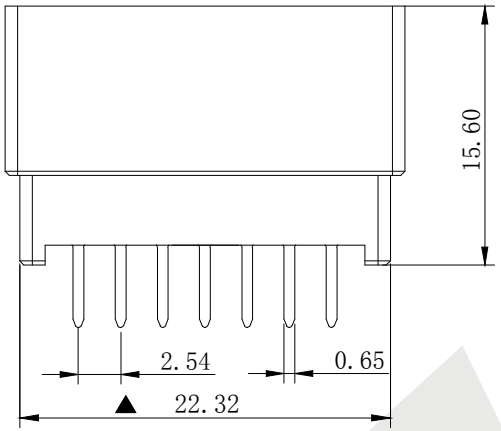

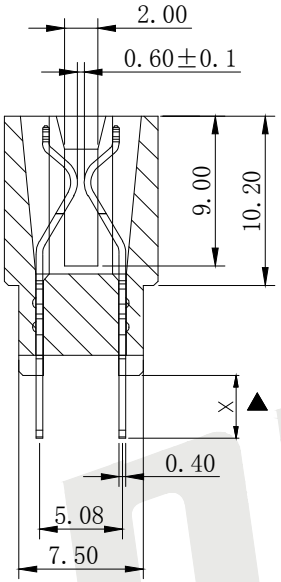

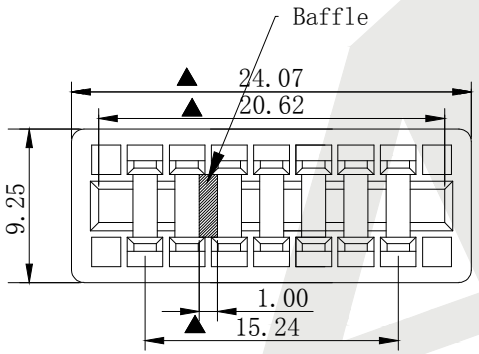

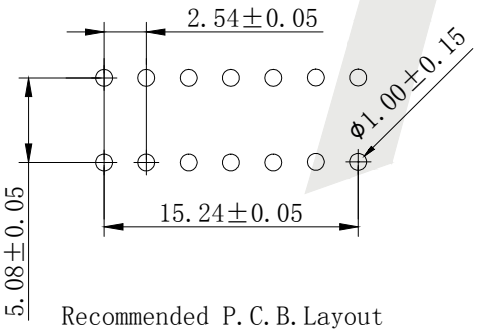

Recommended P.C.B.Layout

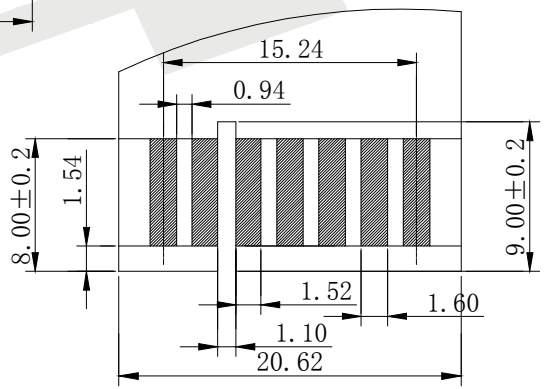

Recommended CARD Layout

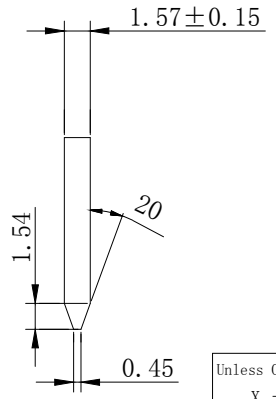

SPECIFICATION
1. CURRENT RATING:3AMP
2. DIELECTRIC WITHSTANDING VOLTAGE:1000V AC RMS 60Hz. 1MIN
3. CONTACT RESISTANCE:20 MILLIOHMS MAX
4. INSULATION RESISTANCE:5000 MEGOHMS MIN. At 500V DC
5. OPERATION TEMPERATURE:-55° C TO +105° C
6. INSERTION FORCE:0.4Kgf MAX. Per Pair
Withdrawal Force:0.25Kgf Mac. Per Pair
Insulator:PBT+G.F. (UL94V-0)
CONTACT:BRASS OF PHOSPHOR BRONZE GOLD PLATED ON CONTACT AREA
TIN PLATED ON SOLDER TAILS, OVER NICKEL

Order code:

ECCS - 12 - B - X - S0 - P - B - 04
① ② ③ ④ ⑤ ⑥ ⑦ ⑧

① SERIES NO:ECCS

② Number of Pins:X
FOR Example:100=100P

③ Pitch:B:2.54MM

④ DIP Length:X
A:1.8MM
B:3.8MM Standard
C:6.3MM D:13.8MM

⑤ Contact Plating
G0:GOld flash
S0: Gold flash/Ni
G1: 3U″ Gold
G2: 5U″ Gold
G3:10U″ Gold
G4:15U″ Gold
G5:30U″ Gold
SN:Tin

⑥ Plastic Materials:
P:PBT

⑦ Packing
A:Tray
B:Bag
T:Tube
U:Tube+CAP
R:Tape&Reel
W:Tape&Reel+CAP

⑧ Product NO.:04

REV	DESCRIPTION	DATE

Unless Otherwise specified tolerance
X.±0.35 X.XX:±0.20
X.X:±0.25 X.XXX:±0.15

SCALE: As Shown	UNIT: mm
DRAW Wu Feng Rong	DATE 06/11/2020
CHECK BobYang	DATE 06/11/2020

3rd ANGLE PROJECTION

ANTENK ELECTRONICS CO,.LTD
Http://www.antenk.com
E-mail:sales@antenk.com

TITLE:
2.54mm 12P Slot Straight DIP With Baffle Connectors

DRAWING NO: ECCS-12BXS0PB04
PRODUCT NO: ECCS-12BXS0PB04