HSF Pb RoHS

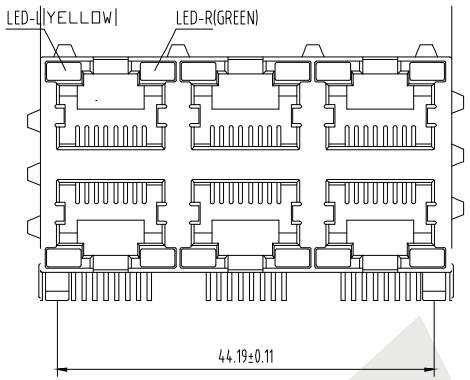

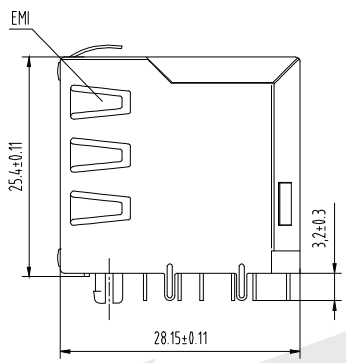

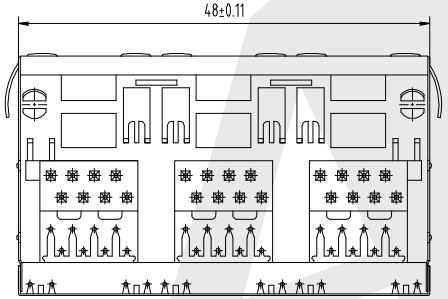

PCB LAYOUT

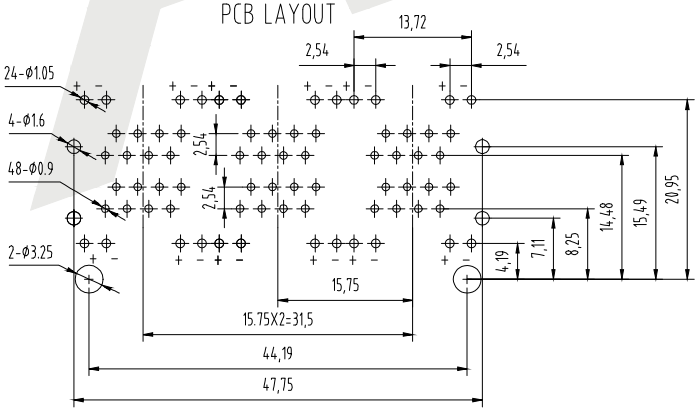

SPECIFICATIONS:

1. Material:
   - 1.1 Housing:Glass Filled Polyester UL94V-0
   - 1.2 Contact:Phosphor Bronze, Ø0.46mm
   - 1.3 Plating:Gold Plating Over Nickel
2. Electrical Characteristic:
   - 2.1 Voltage Rating:125 VAC RMS
   - 2.2 Current Rating:1.5 AMP
   - 2.3 Contact Resistance:45 Milliohms Max
   - 2.4 Insulation Resistance:1000 Megohms Min@500V DC
   - 2.5 Dielectric Withstangding Resistance:1000V AC RMS 60HZ,1 Min
3. Mechanical Characteristic:
   - 3.1 Durrability:750 Cycles Min
   - 3.2 PCB Retention PRE-Solder:1 LB Min
4. Environmental:
   - 4.1 Storage:-40° C To 85° C
   - 4.2 Operation:0° C To 70° C

Mates With Modular Plug Conforming To FCC Part 68,Subpart F

ATRJ5922 - 8P - 8C - X - C2 - I - F

① ② ③ ④ ⑤ ⑥ ⑦

① SERIES NO:
② NUMBER OF POSITIONS (10P,8P,6P,4P)
③ NUMBER OF CONTACTS (10C,8C,6C,4C)
④ Contact PIating
- G0:GOld flash
- G1: 3U″ Gold
- G2: 5U″ Gold
- G3:10U″ Gold
- G4:15U″ Gold
- G5:30U″ Gold
- SN:Tin

⑤ Shield
- A:W/O Shield
- B:Half Shield
- C2:Shield W/Eml
- D:Shield W/O Eml

⑥ Ports
- A:1X1P G:2X1P
- B:1X2P H:2X2P
- C:1X4P I:2X3P
- D:1X5P J:2X4P
- E:1X6P K:2X6P
- F:1X8P L:2X8P

⑦ LED STYLE:
- A:W/O LED
- B:LEFT YELLOW/RIGHT GREEN
- C:LEFT GREEN/RIGHT YELLOW
- D:LEFT RED/RIGHT GREEN
- E:LEFT GREEN/RIGHT RED
- F:LEFT YELLOW/RIGHT YELLOW
- G:LEFT GREEN/RIGHT GREEN

REV	DESCRIPTION	DATE
	⚠ CHANGE C TO C2	12/08/2020

Unless Otherwise specified tolerance
X. ±0.35 X.XX:±0.20
X.X:±0.25 X.XXX:±0.15

SCALE: As Shown	UNIT: mm
DRAW Wu Feng Rong	DATE 22/03/2018
CHECK BobYang	DATE 22/03/2018

3rd ANGLE PROJECTION

ANTENK ELECTRONICS CO,.LTD
Http://www.antenk.com
E-mail:sales@antenk.com

TITLE: RJ45 Jack Side Entry Shielded 2x3P with LED With EMI

DRAWING NO: ATRJ5922-8P8C-X-C2-I-F

PRODUCT NO: ATRJ5922-8P8C-X-C2-I-F