HSF Pb RoHS

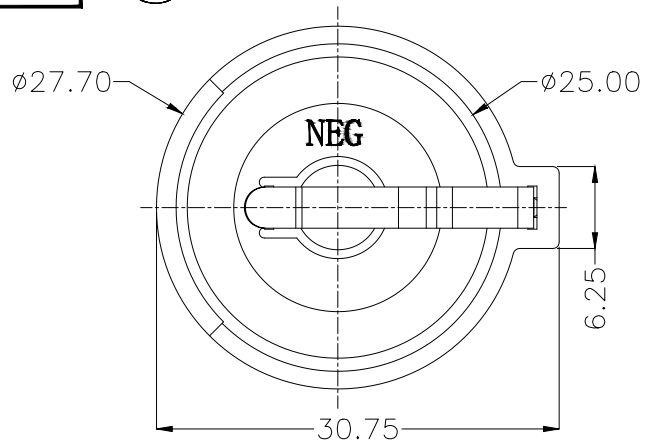

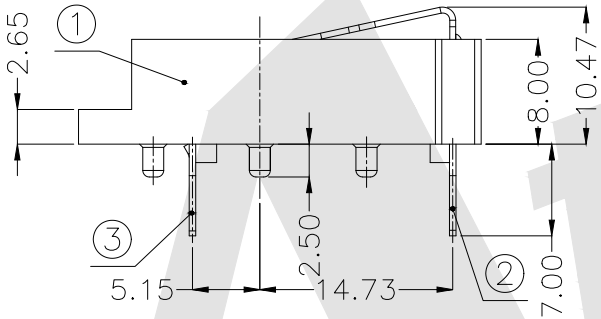

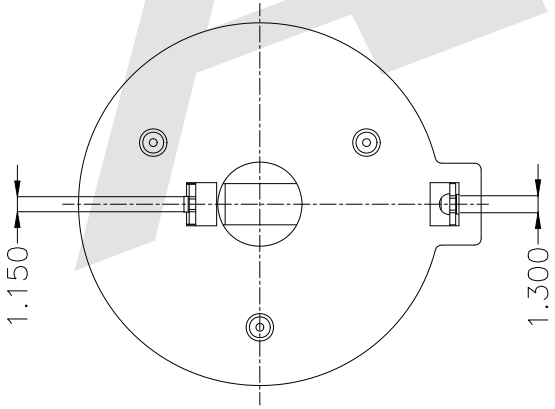

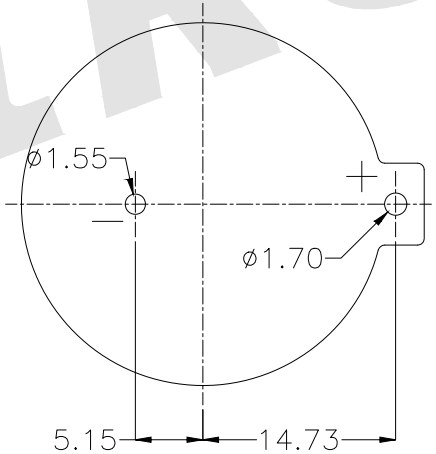

PCB Layout Diagram
Top View

NOTES:
1, BASE″
MAT'L:GLSAA FILED LCP UL 94V-0
2, CONTACTS:
MAT'L:0.15mm TH'K PHOSPHOR BRONZE
FINISH:1 u″ GOLD FLASH, OVER NICKEL PLATE
3, OPERATING TRMPERATURE:220° -255°

Order code:
BT - S - SN - A - CR2477B
① ② ③ ④ ⑤

① BT: Coin Cell Holders
② Apperance for the product
M:SMT TYPE
S:180 TYPE
R:90 TYPE
③ Contact Plating
SN:Tin
GO:GOld flash
G1: 3U″ Gold
G2: 5U″ Gold
G3:10U″ Gold
G4:15U″ Gold
G5:30U″ Gold
④ Packing method
A: Tray packing
R: Tape & reel packing
⑤ Product number
CR2477B

Unless Otherwise specified tolerance X. ±0.35 X.XX:±0.20 X.X:±0.25 X.XXX:±0.15			Atkconn® ATKCONN ELECTRONICS CO,.LTD Http://www.atkconn.com
SCALE: As Shown	UNIT: mm		
DRAW ZLA	DATE 21/07/2022		TITLE: Coin Cell Holders For CR2477 DIP
CHECK BobYang	DATE 21/07/2022		
3rd ANGLE PROJECTION			DRAWING NO: BT-S-SN-A-CR2477B
			PRODUCT NO: BT-S-SN-A-CR2477B

REV	DESCRIPTION	DATE

Atkconn