HSF Pb RoHS

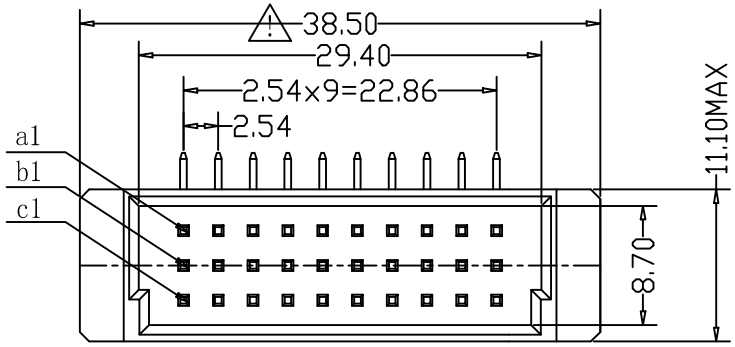

Code	Number Of Contacts	Contact Arrangement	Rows With Contacts	Pitch
A	10		a	2.54
D1			a c	5.08
F1	16		a b c	
C	20		a b	2.54
D			a c	
F	30		a b c	

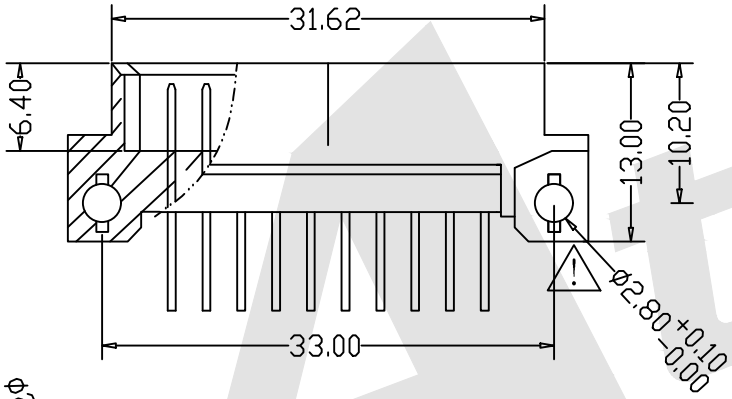

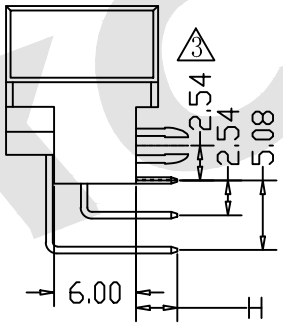

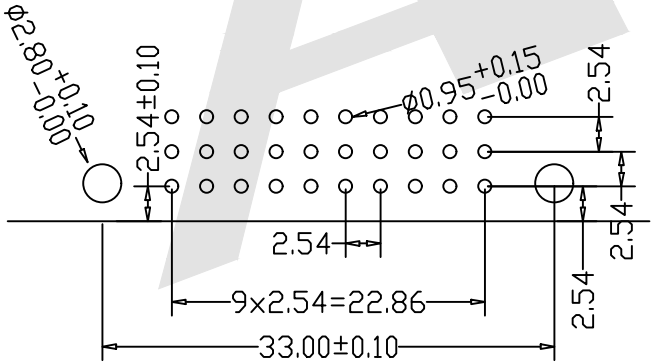

Recommended P.C.B.Layout

SPECIFICATION

Current Rating: 2.0Amp
Insulation Resistance: 1000MΩ min.at DC 100V
Contact Resistance: 20mΩ max
Withstand Voltage: AC 1000V For 1 Minute
Operating Temperature: -55° C to +105° C
Contact Material: Brass
Contact Plating: Au or Sn Over Ni
Insulator Material: PBT+30%GF UL 94V-0
Insertion Force: 30 pin max.28N
Withdrawal Force: 0.15N min.per individual contact

Ordering Code:

DMR - XX - X - X - X - 317
① ② ③ ④ ⑤ ⑥

① Series No:

② No.of Contacts
10P 15P 20p 30p

③ Termination
B:Right tail length H=3.0mm
F:Right tail length H=4.4mm
M:Right tail length H=13.0mm

④ Rows Loaded With Contacts
A:Row a D1:Row a+c(2,4,6...)
F1:Row a+b+c(2,4,6...)
C:Row a+b
D:Row a+c
F:Row a+b+c

⑤ Contact Plating
G0: Gold flash
S0: Gold flash/Ni
G1: 3u″ Gold
S1: 3u″ Gold/Ni
G2: 5u″ Gold
S2: 5u″ Gold/Ni
G3: 10u″ Gold
S3: 10u″ Gold/Ni
G4: 15u″ Gold
S4: 15u″ Gold/Ni
G5: 30u″ Gold
S5: 30u″ Gold/Ni
SN: Tin

⑥ Series number
317

REV	DESCRIPTION	DATE

Unless Otherwise specified tolerance
X. ±0.35 X.XX: ±0.20
X.X: ±0.25 X.XXX: ±0.15

SCALE: As Shown	UNIT: mm
DRAW ZLA	DATE 24/04/2022
CHECK BobYang	DATE 24/04/2022

3rd ANGLE PROJECTION

Atkconn® ATKCONN ELECTRONICS CO,.LTD
Http://www.atkconn.com

TITLE: DIN41612 Right Angle Plug Type 1/3C Connector 30 Positions

DRAWING NO: DMR-XX-XXX-317
PRODUCT NO: DMR-XX-XXX-317