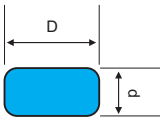


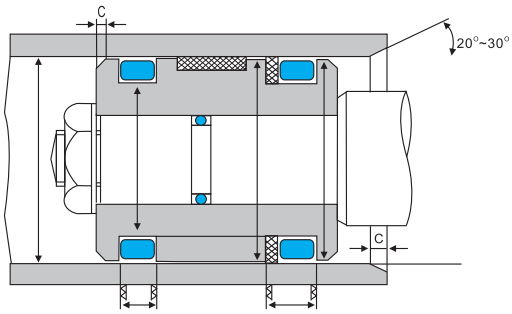


| Model | D | d |
|---|---|---|
| CSP | 7.5 | 4 |
| CSP | 7.7 | 3.9 |
| CSP | 8 | 4.5 |
| CSP | 10 | 4 |
| CSP | 10 | 5 |
| CSP | 10 | 6 |
| CSP | 10.15 | 5 |
| CSP | 10.2 | 5 |
| CSP | 10.4 | 5 |
| CSP | 11.15 | 5 |
| CSP | 11.5 | 6 |
| CSP | 11.5 | 5.5 |
| CSP | 11.7 | 6 |
| CSP | 12 | 7 |
| CSP | 12.6 | 7.4 |
| CSP | 12.7 | 7 |
| CSP | 12.8 | 7.4 |
| CSP | 14.15 | 6.8 |
| CSP | 16 | 9 |
| CSP | 16.5 | 9 |