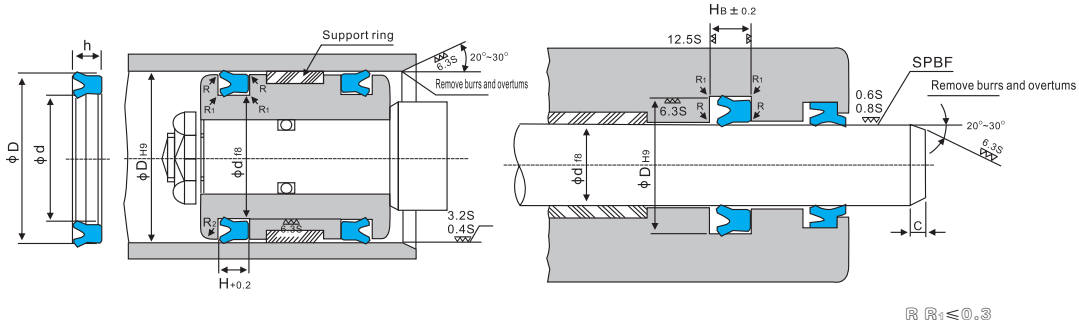

The piston rod surface should be polished (SPBF) or (RLB) to 0.8~1.6 μ mRmax(0.2~0.4 μ MRA), especially under severe lubrication conditions, polishing is more necessary.

Model	ϕd	ϕD	h	H
MYA-3	3	6	2.1	2.5
MYA-4	4	7	2.1	2.5
MYA-5	5	8	2.1	2.5
MYA-6	6	9	2.1	2.5
MYA-7	7	10	2.1	2.5
MYA-7	7	11	3.2	3.6
MYA-8	8	11	2.1	2.5
MYA-9	9	12	2.1	2.5
MYA-10	10	13	2.1	2.5
MYA-10A	10	14	2.8	3.2
MYA-11	11	15	2.8	3.2
MYA-11.2	11.2	15.2	2.8	3.2
MYA-12	12	16	2.8	3.2
MYA-12.5	12.5	16.5	2.8	3.2
MYA-14	14	18	2.8	3.2
MYA-15	15	19	2.8	3.2
MYA-16	16	20	2.8	3.2
MYA-18	18	22	2.8	3.2
MYA-20	20	24	2.8	3.2
MYA-21	21	25	2.8	3.2
MYA-22	22	26	2.8	3.2
MYA-23	23	27	2.8	3.2
MYA-24	24	30	3.7	4.6
MYA-30	30	36	3.7	
MYA-34	34	40	4.2	4.6
MYA-39	39	45	4.2	4.6
MYA-205	205	212	6.3	6.7
MYA-235	235	242	5.6	6