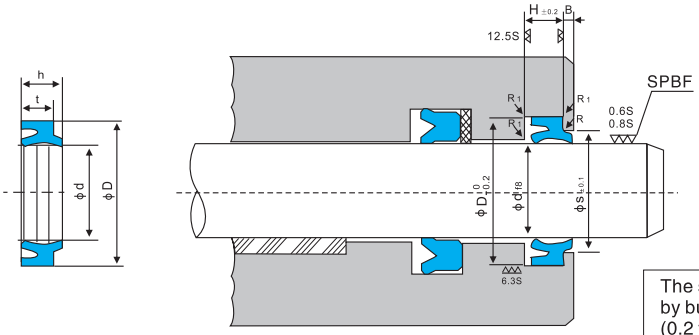

R≤0.3
R1≤0.5

The surface of the rod should be finished by buffing (SPBF)to 0.8 to 1.6 μ mRz (0.2 to 0.4 μ mRa).

Model	ϕd	ϕD	t	h	ϕs	H	B	KVK Part number
DHS-11.2	11.2	19.2	4.5	6	15.5	5	2	40851
DHS-12.5	12.5	20.5	4.5	6	16.8	5	2	40852
DHS-14	14	22	4.5	6	18.3	5	2	40853
DHS-16	16	24	4.5	6	20.3	5	2	40854
DHS-18	18	26	4.5	6	22.3	5	2	40855
DHS-20	20	28	4.5	6	24.3	5	2	40856
DHS-22.4	22.4	30.4	4.5	6	26.7	5	2	40857
DHS-23.5	23.5	31.5	4.5	6	27.8	5	2	40858
DHS-25	25	33	4.5	6	29.3	5	2	40859
DHS-28	28	36	4.5	6	32.3	5	2	40860
DHS-30	30	38	5	6.5	34.0	6	2	40861
DHS-31.5	31.5	39.5	5	6.5	35.5	6	2	40862
DHS-32	32	40	5	6.5	36.0	6	2	40863
DHS-35	35	43	5	6.5	39.0	6	2	40864
DHS-35.5	35.5	43.5	5	6.5	39.5	6	2	40865
DHS-36	36	44	4.5	5.8	40.3	5	3	40899
DHS-38	38	46	5	6.5	42.0	6	2	40866
DHS-39	39	48	5.5	7	43.0	6.5	2	40900
DHS-40	40	48	5	6.5	44.0	6	2	40867
DHS-45	45	53	5	6.5	49.0	6	2	40868
DHS-50	50	58	5	6.5	54.0	6	2	40869
DHS-53	53	61	5	6.5	57.0	6	2	40870
DHS-55	55	63	5	6.5	59.0	6	2	40871
DHS-56	56	64	5	6.5	60.0	6	2	40872
DHS-60	60	68	5	6.5	64.0	6	2	40873
DHS-63	63	71	5	6.5	67.0	6	2	40874
DHS-65	65	73	5	6.5	69.0	6	2	40875
DHS-67	67	75	5	6.5	71.0	6	2	40876
DHS-70	70	80	6	8	75.0	7	3	40877
DHS-71	71	81	6	8	76	7	3	40878
DHS-75	75	85	6	8	80	7	3	40879
DHS-80	80	90	6	8	85	7	3	40880
DHS-85	85	95	6	8	90	7	3	40881
DHS-90	90	100	6	8	95	7	3	40882

Model	ϕd	ϕD	t	h	ϕs	H	B	KVK Part number
DHS-95	95	105	6	8	100	7	3	40883
DHS-98	98	108	6	8	103	7	3	40884
DHS-100	100	110	6	8	105	7	3	40885
DHS-105	105	115	6	8	110	7	3	40886
DHS-112	112	122	6	8	117	7	3	40887
DHS-120	120	133	7	9.5	127	8	3	40888
DHS-125	125	138	7	9.5	132	8	3	40889
DHS-136	136	149	7	9.5	143	8	3	40890
DHS-140	140	153	7	9.5	147	8	3	40891
DHS-145	145	158	7	9.5	152	8	3	40892
DHS-160	160	174	7	9.5	167	8	3	40893
DHS-165	165	179	7	9.5	172	8	3	40894
DHS-175	175	188	7	9.5	182	8	3	40901
DHS-180	180	194	7	9.5	187	8	3	40895
DHS-200	200	214	7	9.5	207	8	3	40896
DHS-204	204	218	7	9.5	211	8	3	40897
DHS-230	230	244	7	9.5	237	8	3	40898