HSF Pb RoHS

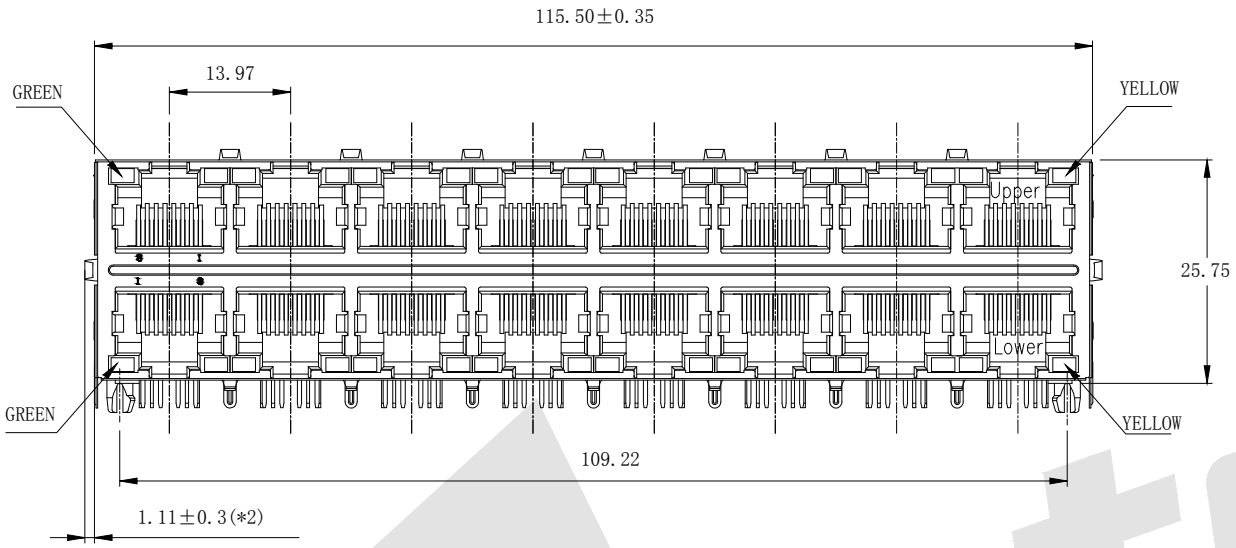

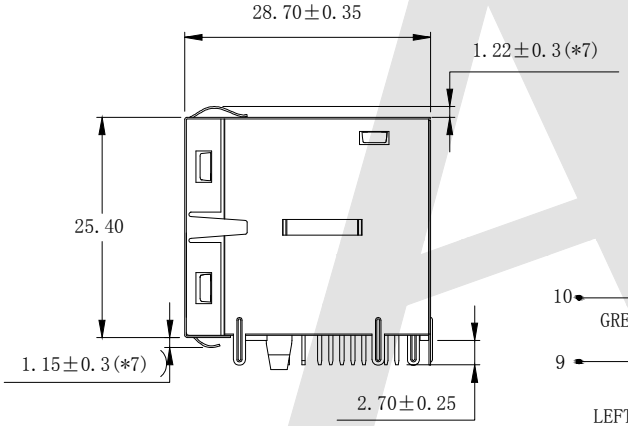

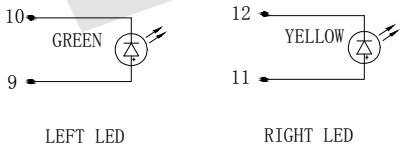

EMITTING COLOR	λp(nm)	Vf@If=20mA	Ir@Vr=5V
GREEN	572	1.7~2.6V	10uA MAX.
YELLOW	586	1.7~2.6V	10uA MAX.

NOTE:
1. Material:
 1.1 Houising:BLACK Glass Filed Thermoplastic UL94 V-0
 1.2 Aligner:BLACK Glass Filed Thermoplastic UL94 V-0
 1.3 Insert:BLACK Glass Filed Thermoplastic UL94 V-0
 1.4 RJ Contacts:Phosphor Bronze C5210
  Finish:Selective Gold Plated See Table
 1.5 Shield:Stainless Steel
  Finish:Ground Pin Tin Plated
 1.6 LED:Epoxy Resin
  Finish:Tin Plated Leads
2. Tolerances Comply With EIA-968 Dimension Requirements
3. Wave Solder Compatible For 265° C For 10 Seconds
4. UL Approval Per DU*R2 & DU*R8

Order Code:

ATRT - 9 - E - A - G0 - A - 003
(1) (2) (3) (4) (5) (6)

(1) Type of product code
 9:1000Mbs

(2) Number of contanct ports

E	RJ45 2*8

(3) Product dimension definition

A	With LED WITH EMI
G	Without LED Without EMI
I	Without LED Unshield
J	With LED Unshield

(4) Plating product definition

Go	Gold Flash
G1	3U″ Gold
G2	6U″ Gold
G3	10U″ Gold
G4	15U″ Gold
G5	30U″ Gold
SN	Tin

(5) Packing
 A:Tray B:Bag T:Tube
 U:Tube+CAP R:Tape&Reel
 W:Tape&Reel+CAP

(6) Series Number:003

REV	DESCRIPTION	DATE

Unless Otherwise specified tolerance
X. ±0.35 X.XX:±0.20
X.X:±0.25 X.XXX:±0.15

SCALE: As Shown	UNIT: mm
DRAW Wu Feng Rong	DATE 19/05/2020
CHECK BobYang	DATE 19/05/2020

3rd ANGLE PROJECTION

ANTENK ELECTRONICS CO,.LTD
Http://www.antenk.com
E-mail:sales@antenk.com

TITLE:
RJ45 2X8 PORT WITH TRANSFORMER 1000Mbps WITH LED

DRAWING NO: ATRT-9EAG0A003
PRODUCT NO: ATRT-9EAG0A003

Antenk

HSF Pb RoHS

SCHEMATIC

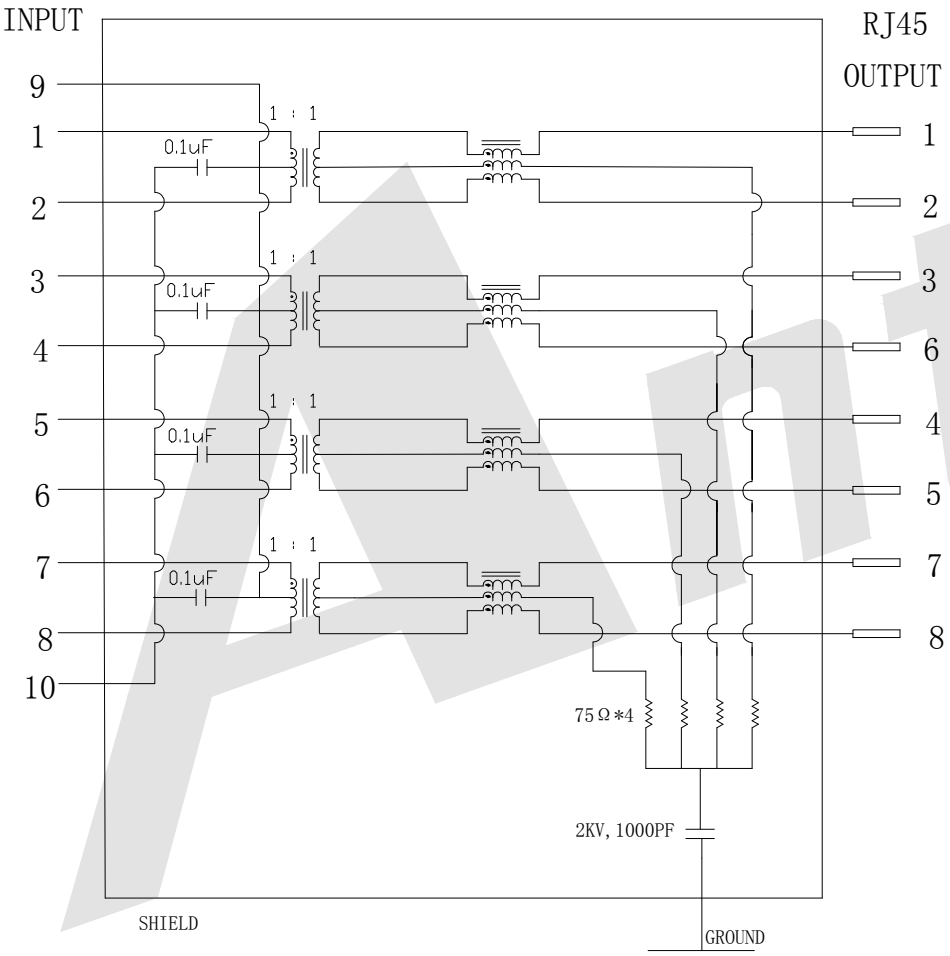

Electrical Specifications

Test (25℃±5°)

1. INSERTION LOSS:1-100MHz-1.0DB MAX
2. Return Loss: 1MHz-30MHz-18dB Min
   30MHz-60MHz-16dB Min
   60MHz-80MHz -12dB Min
   80MHz-100MHz -10dB Min
3. Cross Talk: @1-100MHz-30dB Min
4. Common Mode Rejection:
   1-100MHz-30dB Min
5. Hi-POT:1500Vrms(or 2250VDC),1sec
6. Inductance:350uH MIN @100KHz/0.1V,8mA DC BIAS
7. LED:Forward Voltage (V)@20mA
   Typical:2.2/MAX:2.6

Unless Otherwise specified tolerance X.±0.35 X.XX:±0.20 X.X:±0.25 X.XXX:±0.15		ANTENK ELECTRONICS CO,.LTD Http://www.antenk.com E-mail:sales@antenk.com
SCALE: As Shown	UNIT: mm	
DRAW Wu Feng Rong	DATE 19/05/2020	TITLE: RJ45 2X8 PORT WITH TRANSFORMER 1000Mbps WITH LED
CHECK BobYang	DATE 19/05/2020	
3rd ANGLE PROJECTION		DRAWING NO: ATRT-9EAG0A003
		PRODUCT NO: ATRT-9EAG0A003

REV	DESCRIPTION	DATE

HSF Pb RoHS

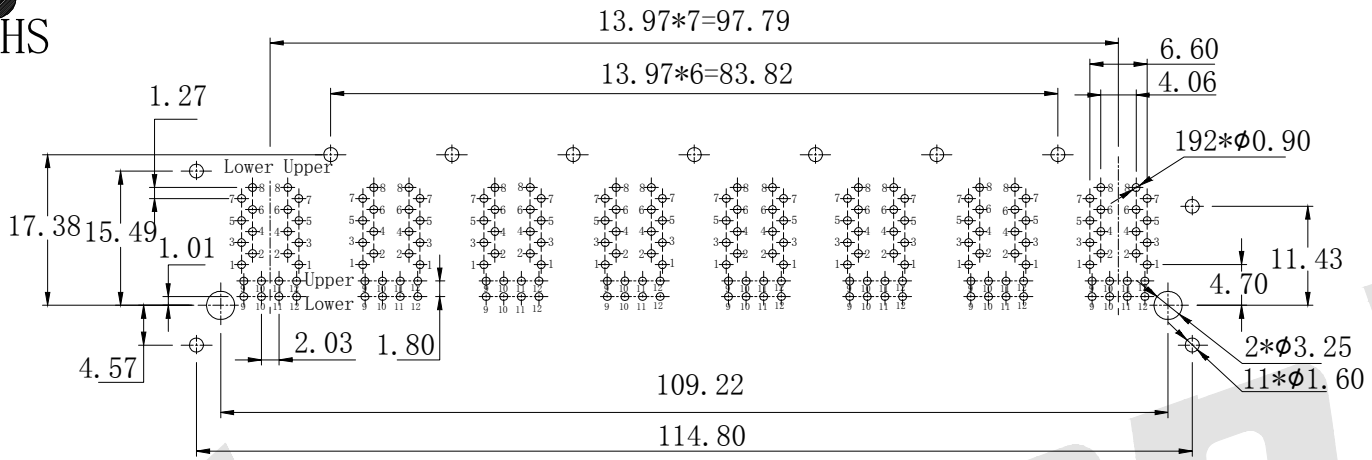

RECOMMENDED PCB LAYOUT
Layout Tolerance=±0.05mm
PCB THICKNESS=1.60mm
TOP VIEW

SUGGESTED PANEL OPENING

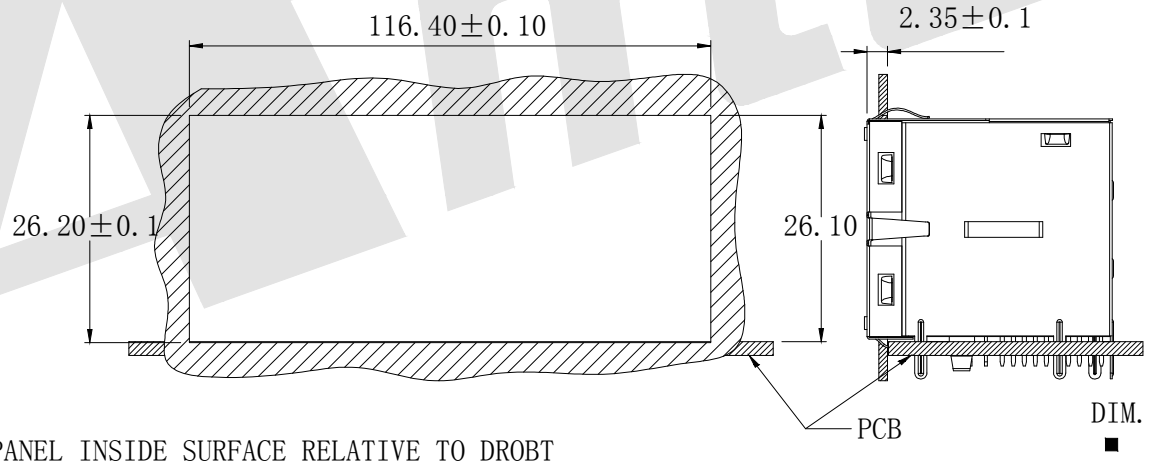

NOTE:
THE DISTANCE OF PANEL INSIDE SURFACE RELATIVE TO DROBT SURFACE OF PART IS ONLY A SUGGESTION. IN CASE THIS DISTANCE IS DIFFERENT. THE REQUIRED PANEL OPENING DIMENSIONS CHANGE ACCORDINGLY

REV	DESCRIPTION	DATE

Unless Otherwise specified tolerance
X. ±0.35 X.XX: ±0.20
X.X: ±0.25 X.XXX: ±0.15

SCALE: As Shown	UNIT: mm
DRAW Wu Feng Rong	DATE 19/05/2020
CHECK BobYang	DATE 19/05/2020

3rd ANGLE PROJECTION

ANTENK ELECTRONICS CO,.LTD
Http://www.antenk.com
E-mail:sales@antenk.com

TITLE:
RJ45 2X8 PORT WITH TRANSFORMER 1000Mbps WITH LED

DRAWING NO: ATRT-9EAG0A003
PRODUCT NO: ATRT-9EAG0A003