HSF Pb RoHS

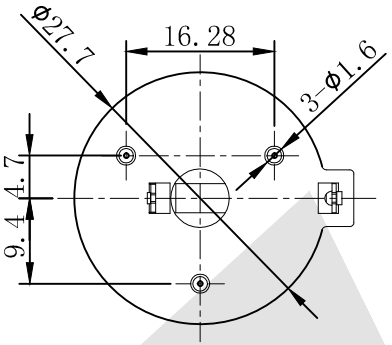

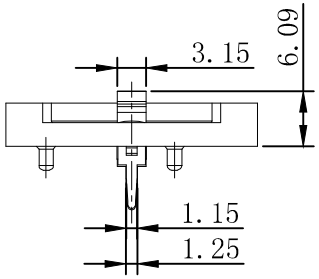

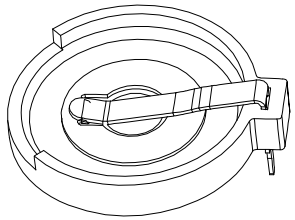

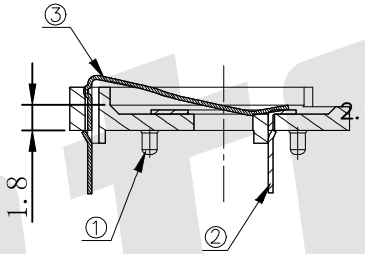

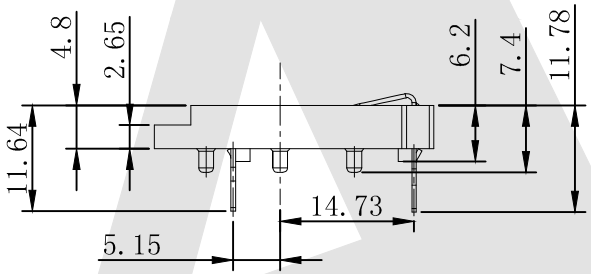

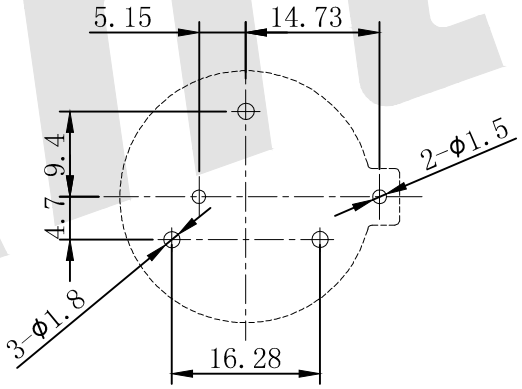

PCB HOLE LAYOUT

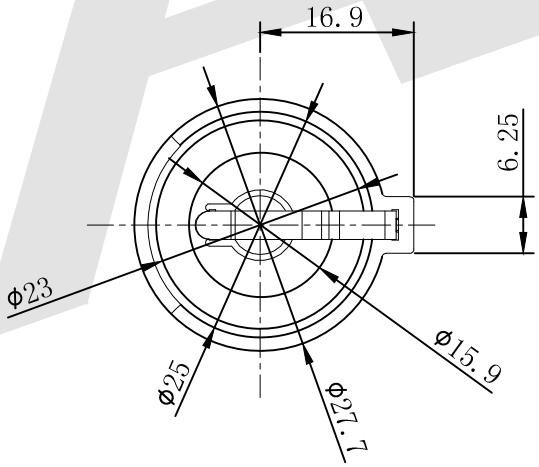

NOTE:

1, Material:
- a. Housing:PBTVO+GF BK
- b. Contact:C2680
  (Surface Plating:Sn 10u″)
  See Ordering Information

2, Electric:
- a. Contact Resistiance:30 Milliohms Max
- b. Insulation Resistance:1000 MEGA OHMS Min
- c. Dielectric Voltage:500V AC One Sea Level
- d. Operating Temperature: -55° To 105°

BT	—	S	—	SN	—	R	-	CR2430A
①		②		③		④		⑤

① BT: Coin Cell Holders

② Apperance for the product
- M:SMT TYPE
- S:180 TYPE
- R:90 TYPE

③ Contact PIating
- SN:Tin
- G0:GOld flash
- G1: 3U″ Gold
- G2: 5U″ Gold
- G3:10U″ Gold
- G4:15U″ Gold
- G5:30U″ Gold

④ Packing method
- A: Tray packing
- R: Tape & reel packing

⑤ Product number
CR2430A

REV	DESCRIPTION	DATE
	change BT-R-SN-CR2430-01 to BT-S-G0-R-CR2430A	01/13/2019

Unless Otherwise specified tolerance
X. ±0.35 X.XX:±0.20
X.X:±0.25 X.XXX:±0.15

SCALE: As Shown	UNIT: mm
DRAW Mo Guo Xuan	DATE 03/15/2019
CHECK BobYang	DATE 03/15/2019

3rd ANGLE PROJECTION

ANTENK ELECTRONICS CO,.LTD
Http://www.antenk.com
E-mail:sales@antenk.com

TITLE: Coin Cell Holders For CR2430

DRAWING NO: BT-S-SN-R-CR2430A

PRODUCT NO: BT-S-SN-R-CR2430A