1. 400V Series

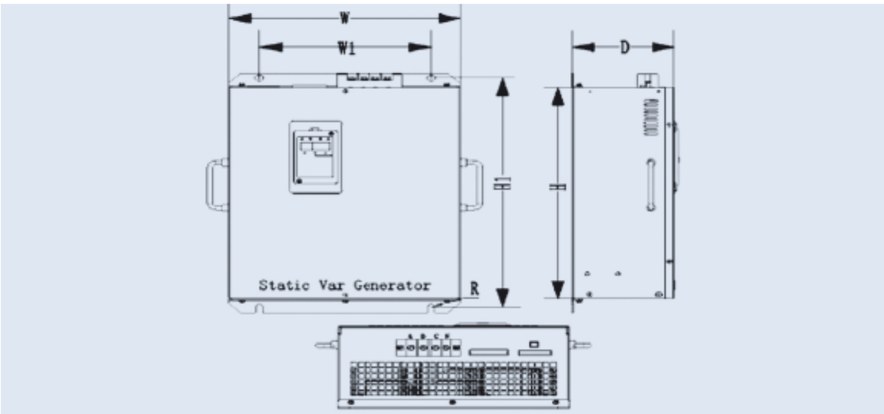

Picture 50 Indoor wall-mounted low-voltage SVG outline drawing

Table 15 400V voltage class wall-mounted size chart

Product Model	Voltage Level (kV)	Rated Capacity (kvar)	Mounting Pitch		Dimensions (mm)			Mounting Hole Radius R (mm)	Weight (kg)
			W1	H1	W	D	H		
FGSVG-L30/0.4-4H	0.4	30	300	505	405	179	465	6	27.5
FGSVG-L30/0.4-3H		30	300	505	405	179	465		27.5
FGSVG-L50/0.4-4H		50	300	600	430	200	560		36.5
FGSVG-L50/0.4-3H		50	300	600	430	200	560		36.5
FGSVG-L100/0.4-4H		100	360	650	506	217	610		56
FGSVG-L100/0.4-3H		100	360	650	506	217	610		56

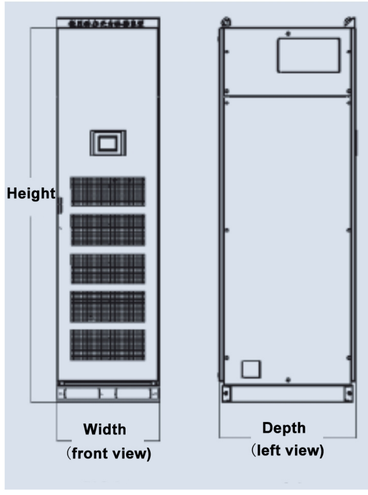

Picture 51 Indoor 400V cabinet low voltage SVG outline drawing

Table 16 Indoor 400V voltage class cabinet size table

Product Model	Voltage Level (kV)	Rated Capacity (kvar)	Dimensions (mm)			Weight (kg)	Entry Method
			Width	Height	Depth		
FGSVG-L100/0.4-4R	0.4	100	600	2200	800	400	Up Line
FGSVG-L100/0.4-3R						400	
FGSVG-L200/0.4-4R		200				480	
FGSVG-L200/0.4-3R						480	
FGSVG-L300/0.4-4R		300				550	
FGSVG-L300/0.4-3R						550	
FGSVG-L400/0.4-4R		400				620	
FGSVG-L400/0.4-3R						620	
FGSVG-L500/0.4-4R		500				700	
FGSVG-L500/0.4-3R						700	

Note: The above dimensions are for reference only. FGI reserves the right to upgrade and improve the product.
If the product size changes, it is subject to change without notice.

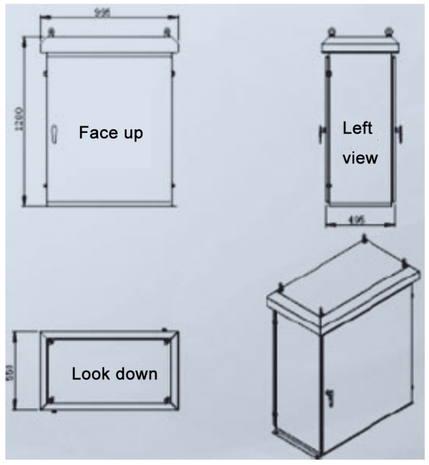

Picture 52 Outdoor 400V low voltage SVG outline drawing

Table 17 Outdoor 400V voltage class cabinet size table

Product Model	Voltage Level (kV)	Rated Capacity (kvar)	Dimensions(mm)			Weight(kg)	Entry Method
			Width	Height	Depth		
FGSVG-L30/0.4-4H-O	0.4	30	850	1100	550	70	Down Line
FGSVG-L30/0.4-3H-O		30	850	1100	550	70	
FGSVG-L50/0.4-4H-O		50	850	1100	550	80	
FGSVG-L50/0.4-3H-O		50	850	1100	550	80	
FGSVG-L100/0.4-4H-O		100	900	1200	550	90	
FGSVG-L100/0.4-3H-O		100	900	1200	550	90	

Note: The above dimensions are for reference only. FGI reserves the right to upgrade and improve the product.
If the product size changes, it is subject to change without notice.

2. 10kV buck 400V series

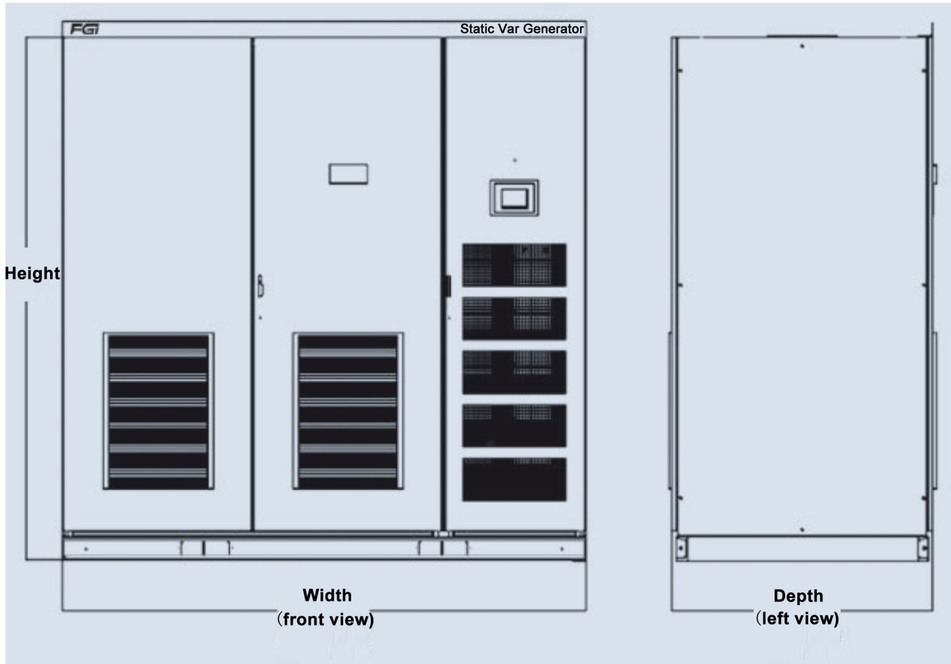

Picture 53 Indoor buck size drawing

Table 18 Indoor 10kV voltage class cabinet size table

Product Model	Voltage Level (kV)	Rated Capacity (kvar)	Dimensions (mm)			Weight (kg)	Entry Method
			Width	Height	Depth		
FGSVG-L100/10T-3R	10kV	100	2200	1100	2200	1700	Down Line
FGSVG-L200/10T-3R		200				1900	
FGSVG-L300/10T-3R		300				2070	
FGSVG-L400/10T-3R		400				2360	
FGSVG-L500/10T-3R		500				2640	

Note: The above dimensions are for reference only. FGI reserves the right to upgrade and improve the product.
If the product size changes, it is subject to change without notice.

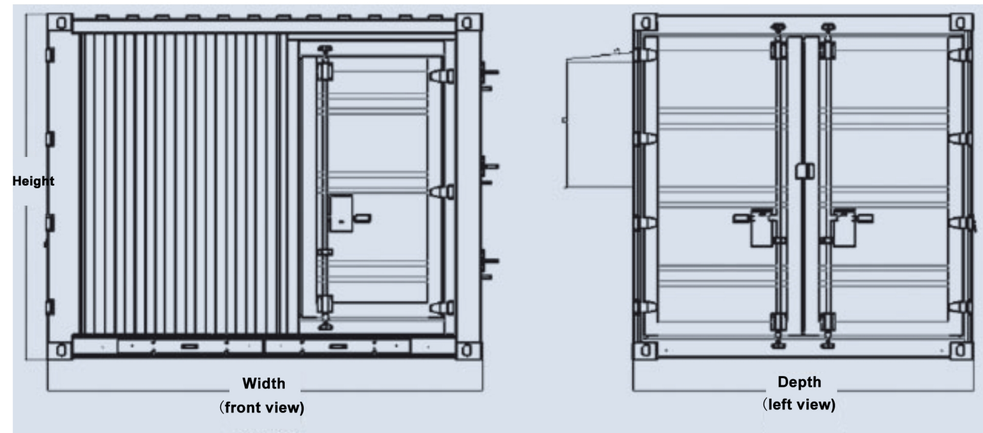

Picture 54 Outdoor type buck size drawing

Table 19 Outdoor type 10kV voltage class cabinet type size table

Product Model	Voltage Level (kV)	Rated Capacity (kvar)	Dimensions (mm)			Weight (kg)	Entry Method
			Width	Height	Depth		
FGSVG-L100/10T-3R-O	10kV	100	3000	2391	2350	3900	Down Line
FGSVG-L200/10T-3R-O		200				4030	
FGSVG-L300/10T-3R-O		300				4270	
FGSVG-L400/10T-3R-O		400				4560	
FGSVG-L500/10T-3R-O		500				4840	

Note: The above dimensions are for reference only. FGI reserves the right to upgrade and improve the product.
If the product size changes, it is subject to change without notice.